ROBOT END EFFECTORS

@ J.Jeevamalar, EGSPEC

Consider typical robots…

What could a robot do without "end effectors"?

Effectors

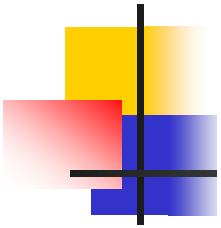

- An *effector* is any device that affects the environment.
  - actuators are mechanisms for getting robots to move
  - an actuator is the actual mechanism (i.e. DC motor) that enables the effector to execute an action.
- A robot's effector is under the control of the robot.
- Effectors can range from legs and wheels to arms and fingers.
- The role of the controller is to get the effectors to produce the desired effect on the environment, based on the robot's task.

End Effectors

Device attached to the robot's wrist to perform a specific task

Tools

– Spot Welding gun
– Arc Welding tools
– Spray painting gun
– Drilling Spindle
– Grinders, Wire brushes
– Heating torches

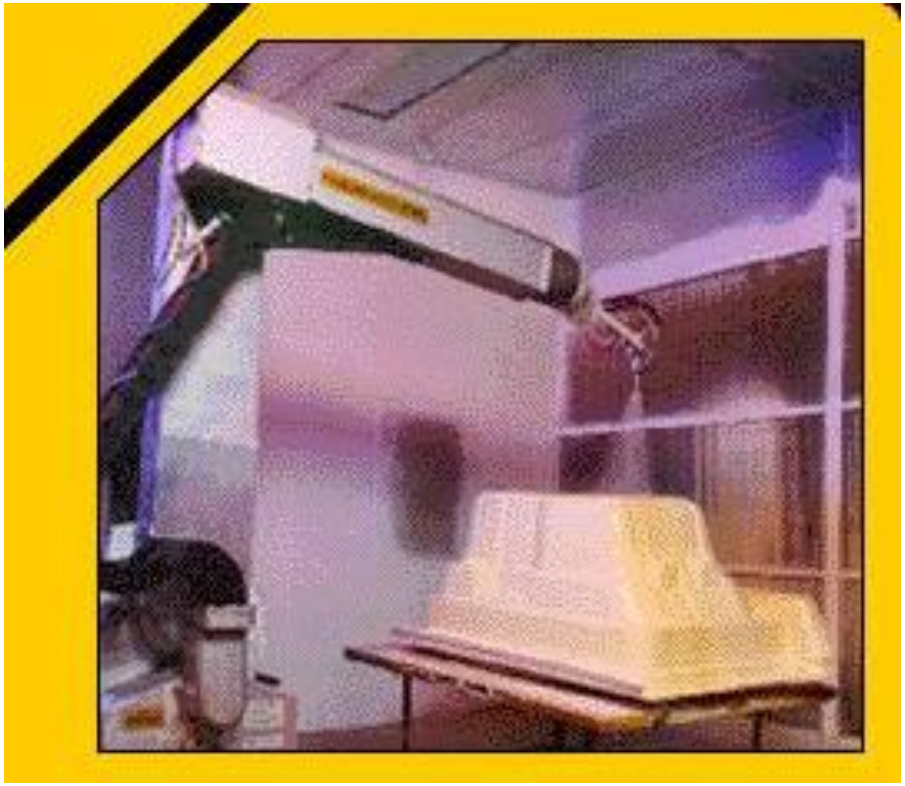

Common end effectors

1. Tools

- Spot welding
- Arc welding
- Drilling, grinding, de-burring, etc.
- Cutting device (laser, water jet, torch, etc.)
- Spray painting

End Effectors

Device attached to the robot's wrist to perform a specific task

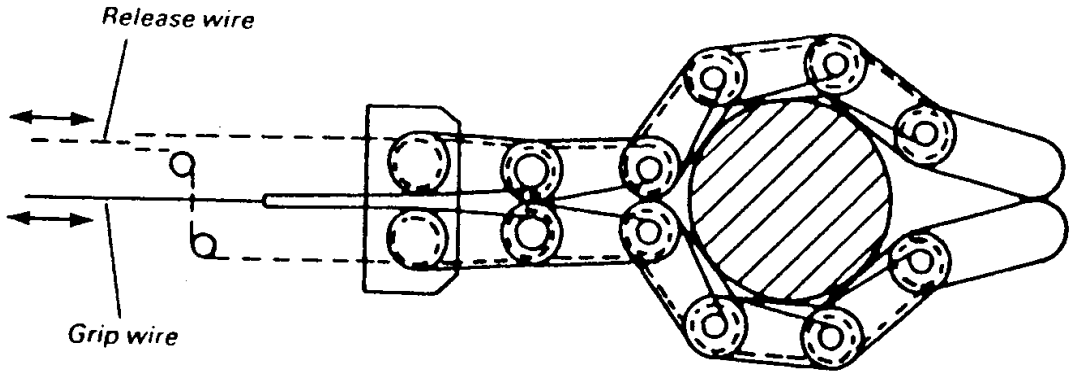

Grippers

- Mechanical Grippers
- Suction cups or vacuum cups
- Magnetized grippers
- Hooks
- Scoops (to carry fluids)

Common end effectors (cont)

2. Grippers

- Mechanical
- Vacuum
- Magnetized
- Adhesive
- Simple (hooks, scoops)

What are Grippers?

- Grippers are end effectors used to grasp and manipulate objects.
- Just like a hand, a gripper enables holding, tightening, handling and releasing of an object.
- A gripper can be attached to a robot or it can be part of a fixed automation system

@ J.Jeevamalar, EGSPEC

History of Gripper

- The first gripper, or artificial hand, was probably a hook replacing a lost human hand.
- An artificial hand is first recorded in 1509---an iron hand made for a German knight.

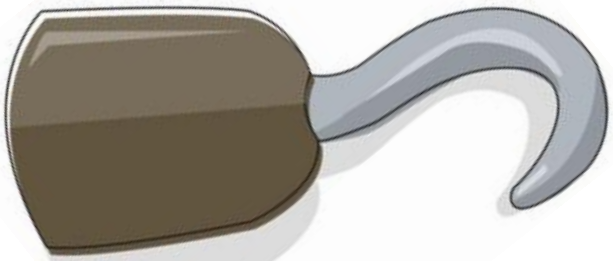

Unimate

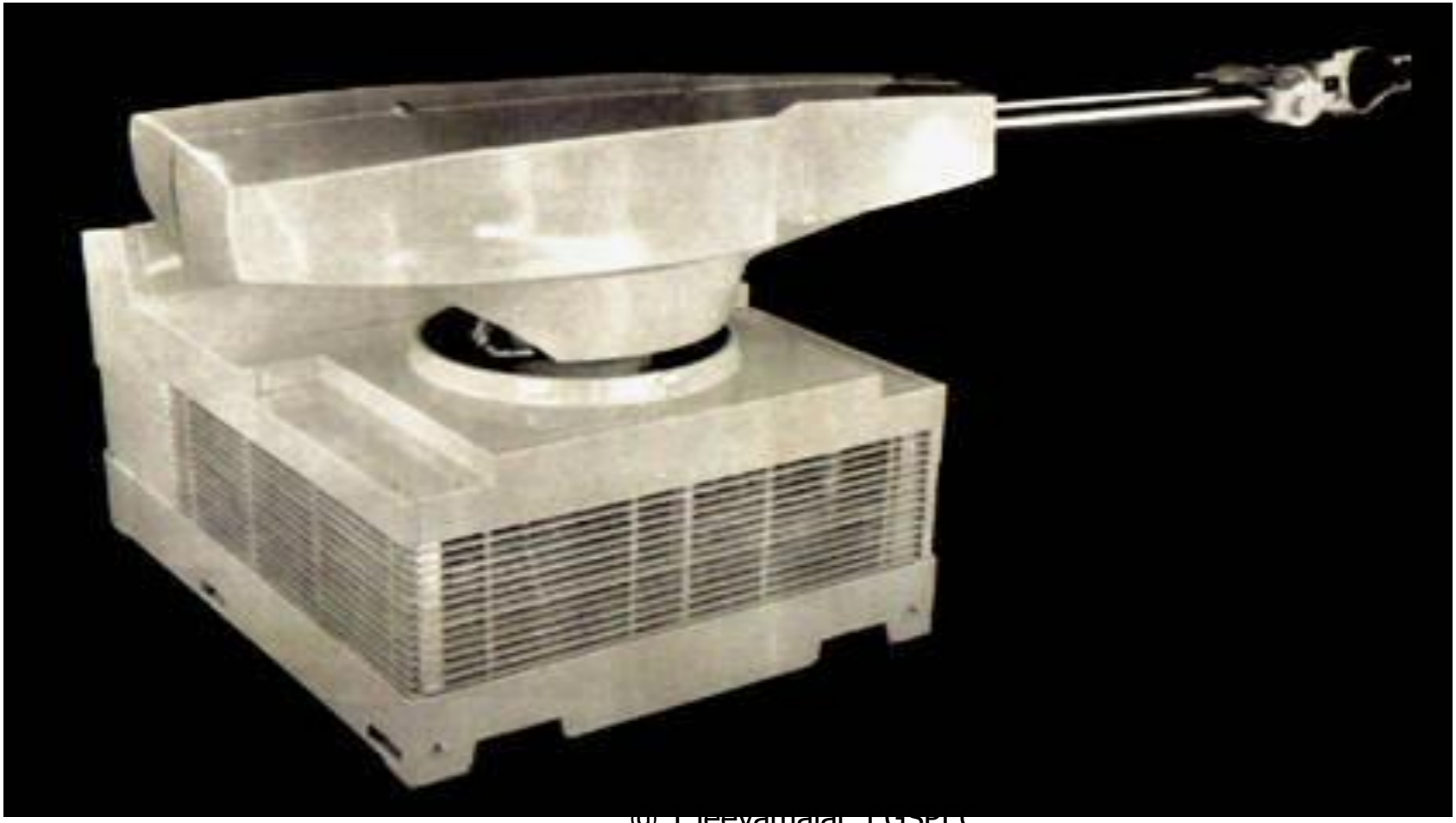

Rancho Arm

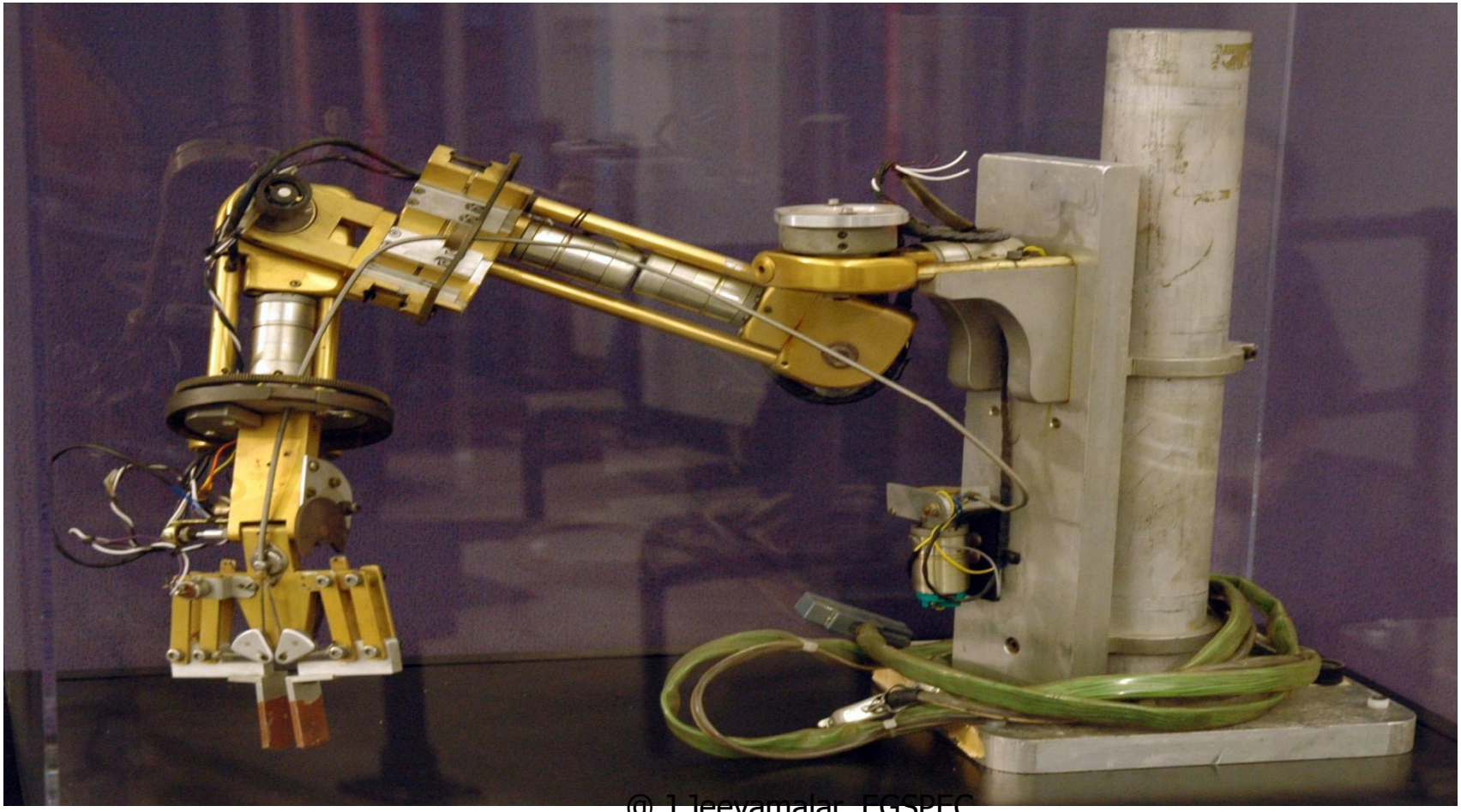

Tentacle Arm

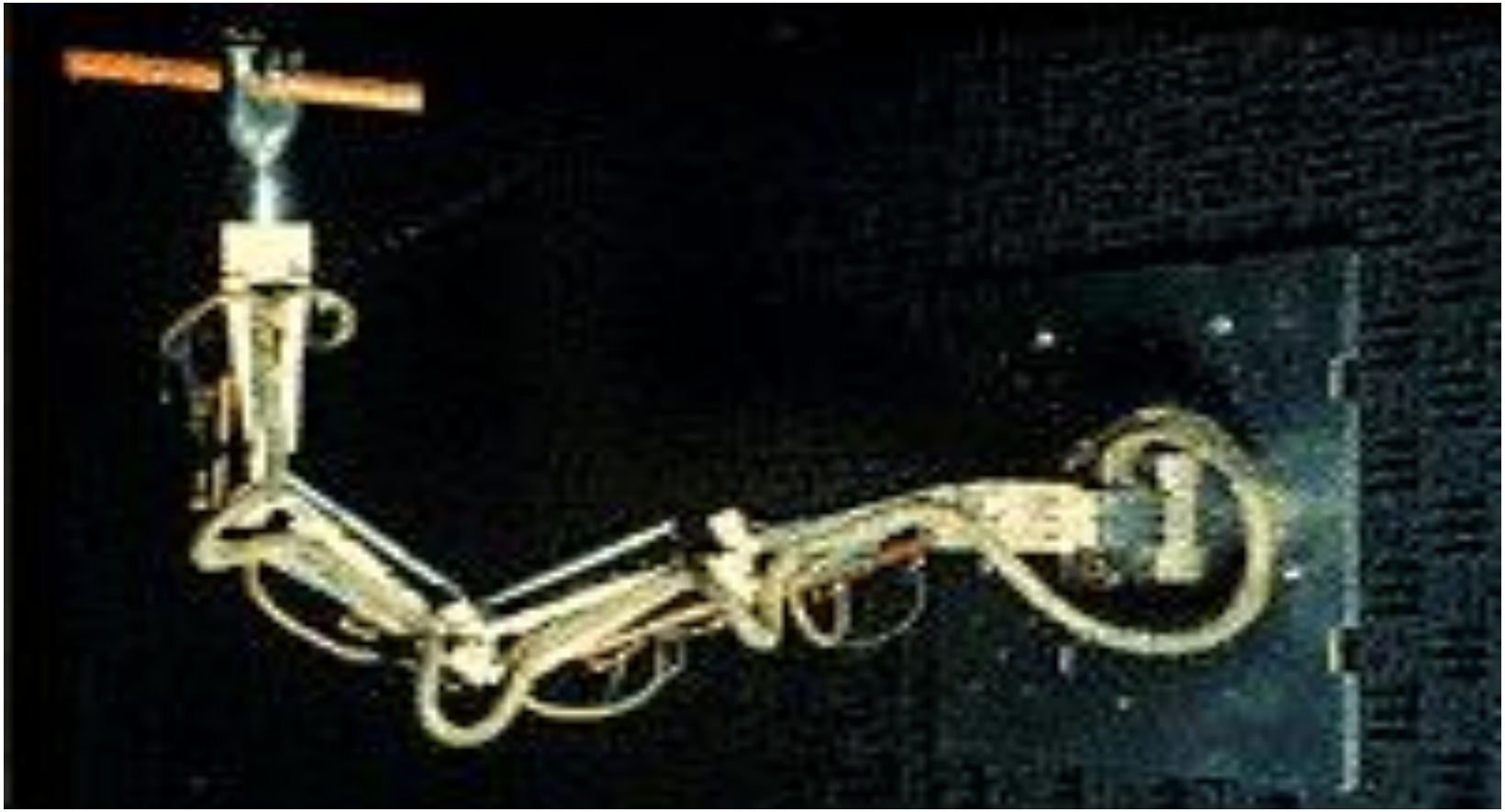

Stanford Arm

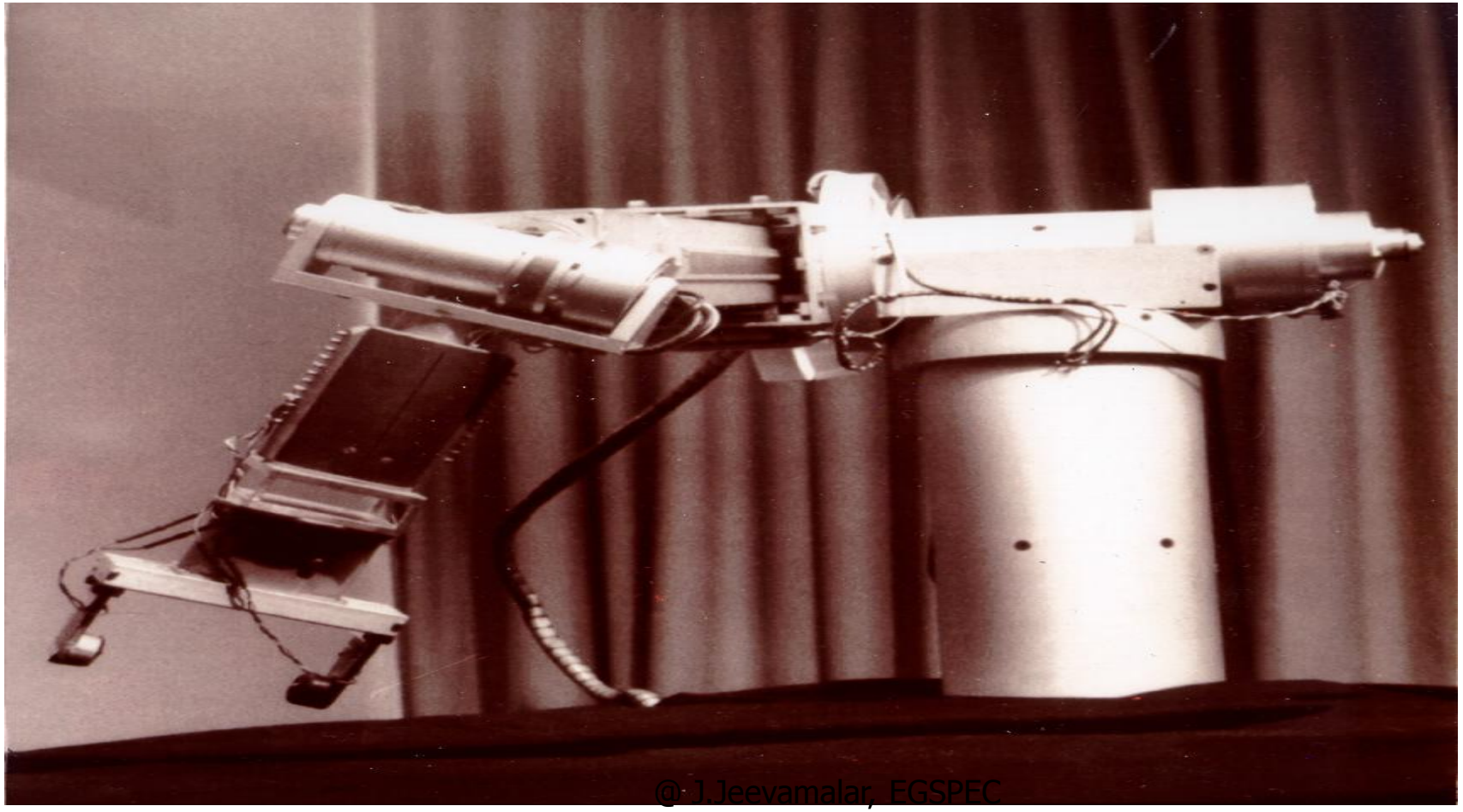

Silver Arm

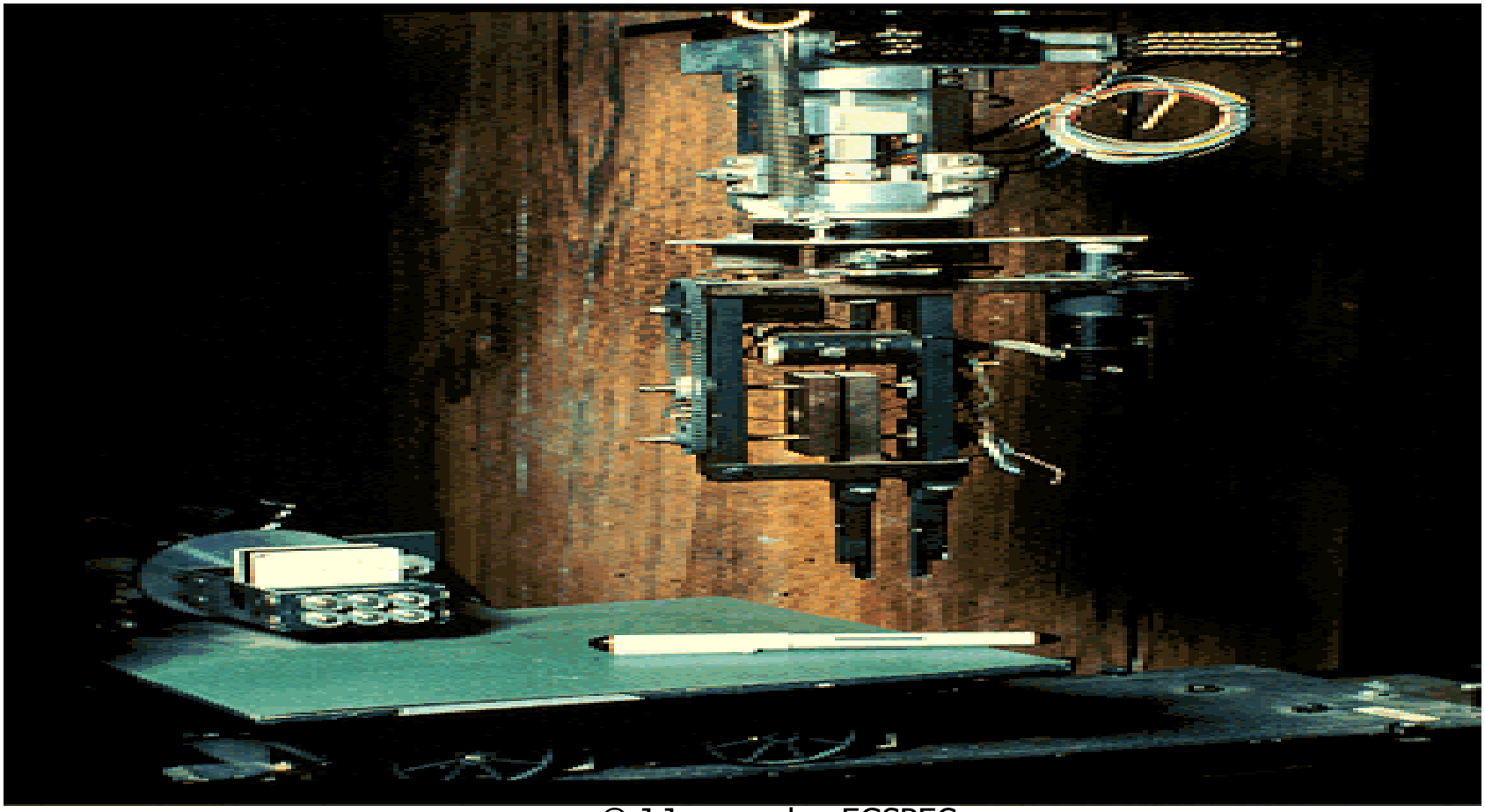

END EFFECTORS - GRIPPERS

1. MECHANICAL GRIPPERS
2. MAGNETIC GRIPPERS
3. PNEUMATIC AND HYDRAULIC GRIPPERS
4. VACUUM GRIPPERS
5. ADHESIVE GRIPPERS
6. MISCELLANEOUS – SCOOPS, HOOKS & INFLATABLE BLADDER

INTERNAL AND EXTERNAL GRIPPERS

Types of Grippers

- Single mechanical devices-hooks and scoops
- Mechanical grippers-two or more fingers actuated by the robot controller
- Vacuum grippers-suction cups used to hold flat objects
- Magnetized grippers -A type of end effector that uses electromagnets or permanent magnets to pick up metallic objects.
- Adhesive devices-adhesive substance used to hold flexible material

Mechanical Gripper

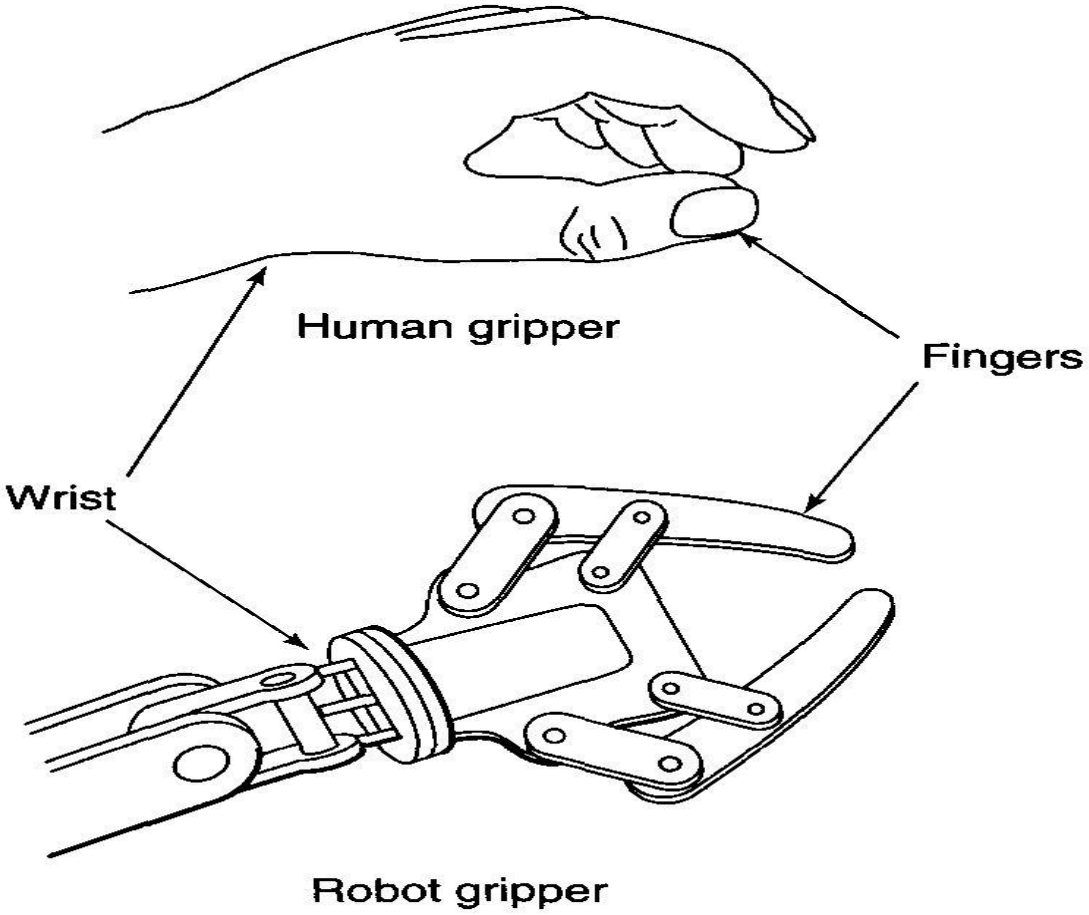

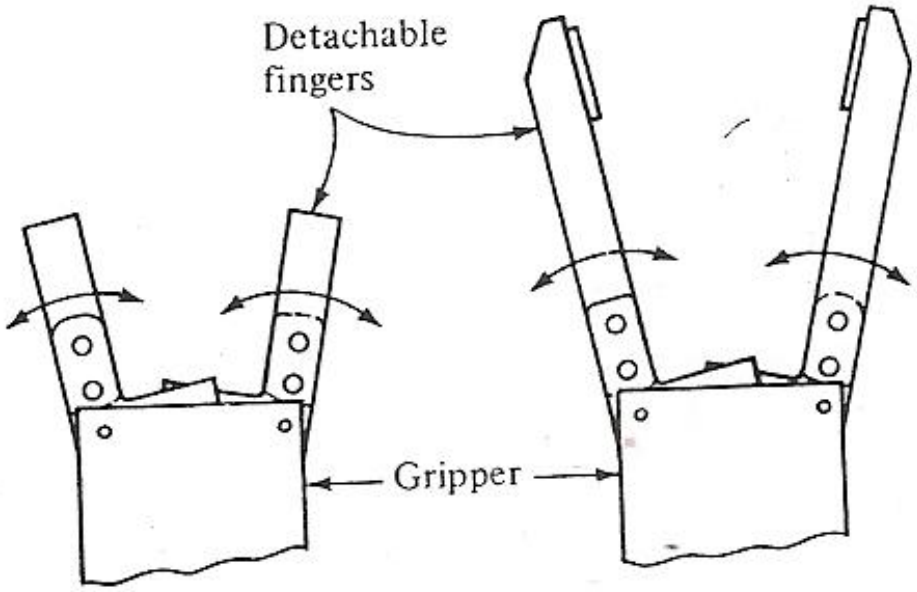

Figure 5-1 Interchangeable fingers can be used with the same gripper mechanism.

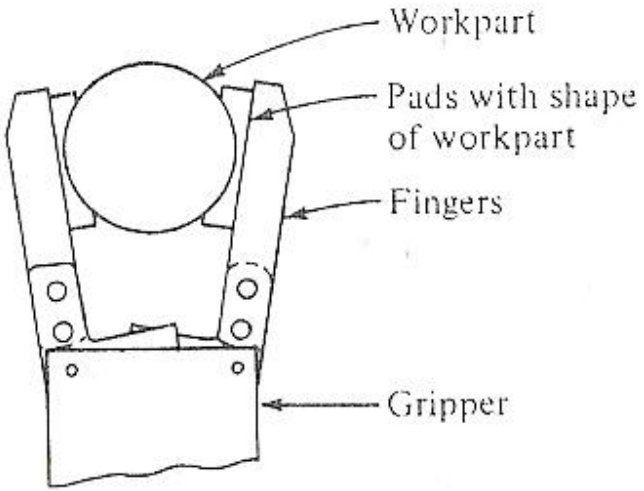

Figure 5-2 Physical constriction method of finger design.

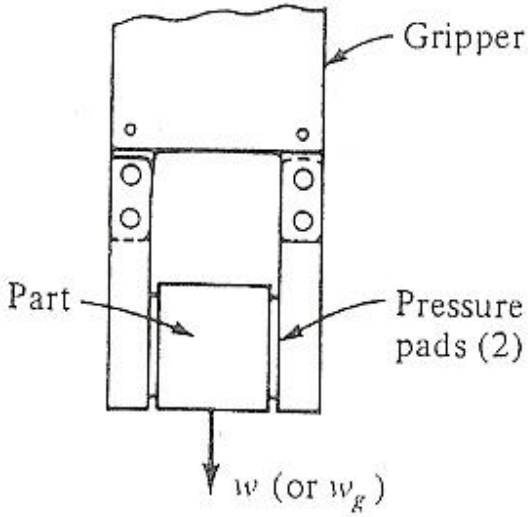

(b)

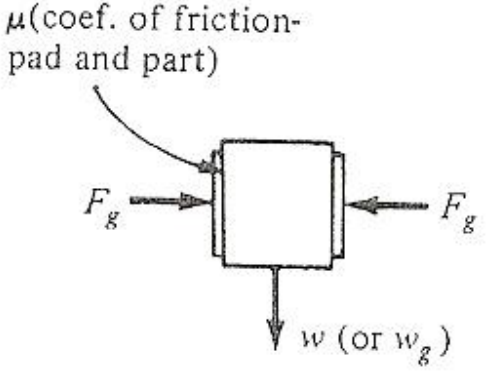

(a)

Figure 5-3 Force against part parallel to finger surfaces tending to pull part out of gripper.

@ J.Jeevamalar, EGSPEC

$$\mu n_f F_g = w \tag{5-1}$$

where μ = coefficient of friction of the finger contact surface against the part surface

n_f = number of contacting fingers

F_g = gripper force

w = weight of the part or object being gripped

This equation would apply when the force of gravity is directed parallel to the contacting surfaces. If the force tending to pull the part out of the fingers is greater than the weight of the object, then Eq. (5-1) would have to be altered. For example, the force of acceleration would be a significant factor in fast part-handling cycles. Engelberger [3] suggests that in a high-speed handling operation the acceleration (or deceleration) of the part could exert a force that is twice the weight of the part. He reduces the problem to the use of a g factor in a revised version of Eq. (5-1) as follows:

$$\mu n_f F_g = wg \tag{5-2}$$

where g = the g factor. The g factor is supposed to take account of the combined effect of gravity and acceleration. If the acceleration force is applied in the same direction as the gravity force, then the g value = 3.0. If the acceleration is applied in the opposite direction, then the g value = 1.0 (2 × the weight of the part due to acceleration minus 1 × the weight of the part due to gravity). If the acceleration is applied in a horizontal direction, then use g = 2.0. The following example will illustrate the use of the equations.

© J. Jeevan Lal, EGSPEC

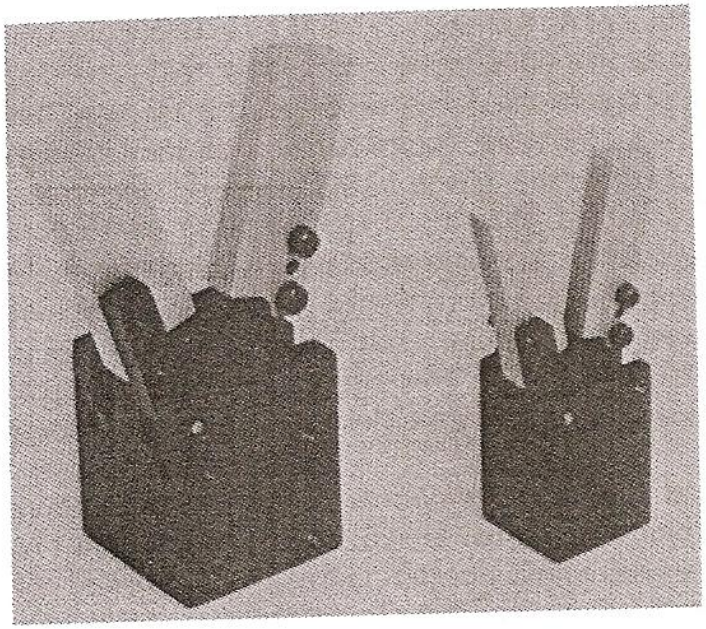

Figure 5-4 Mechanical gripper finger with pivoting movement (Photo courtesy of Phd, Inc.)

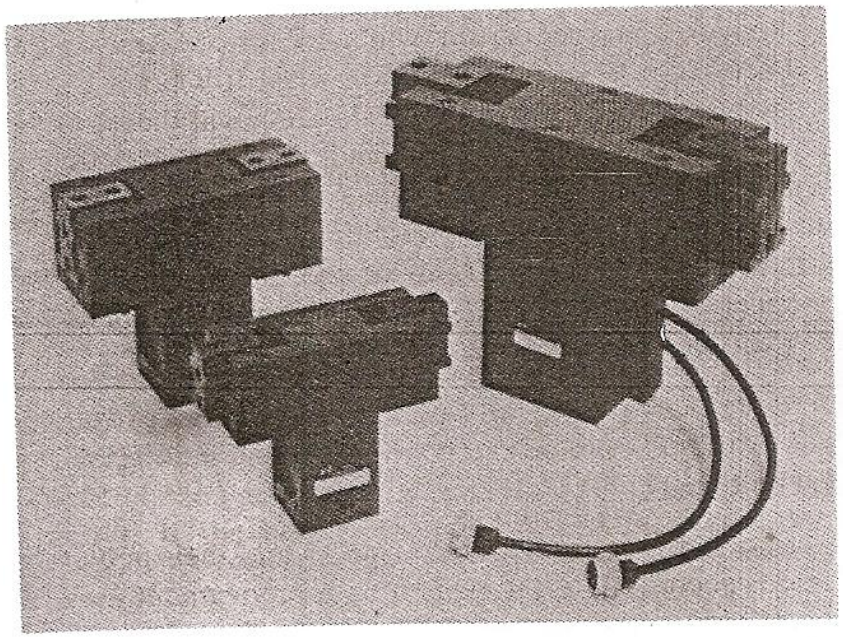

Figure 5-5 Mechanical gripper finger with linear movement using guide rails (Photo courtesy of Phd, Inc.)

@ J.Jeevamalar, EGSPEC

Mechanical grippers can also be classified according to the type of kinematic device used to accurate the finger movement. The classification are

1. Linkage actuation
2. Gear-and-rack actuation
3. Cam actuation
4. Screw actuation
5. Rope-and-pulley actuation
6. Miscellaneous

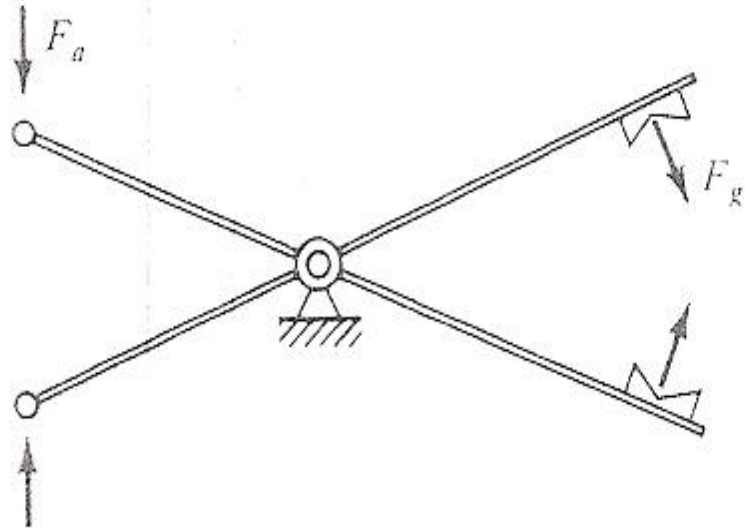

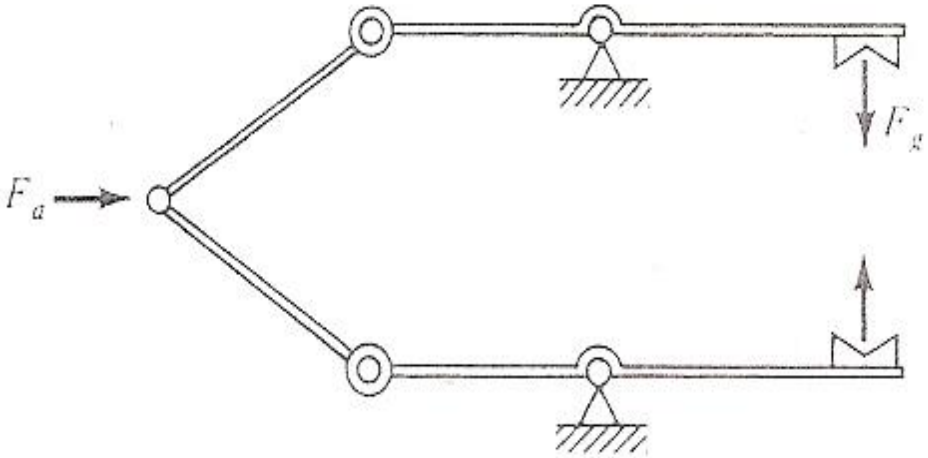

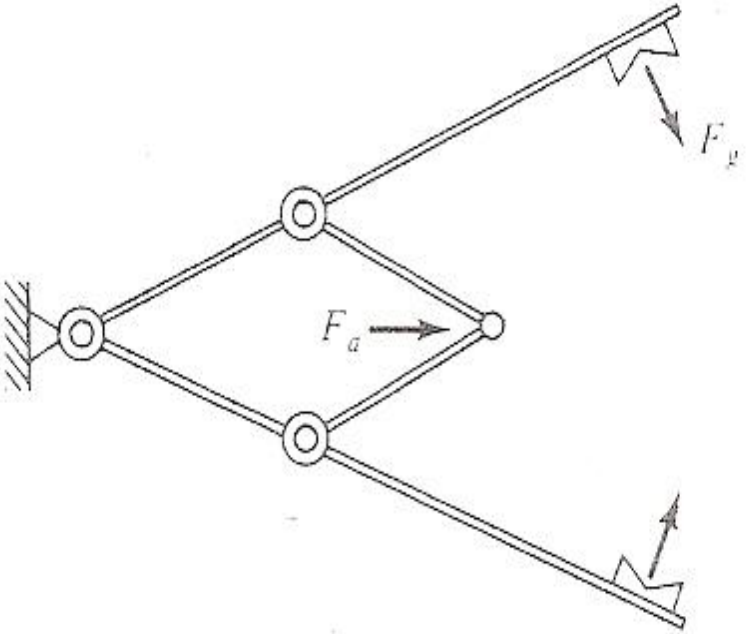

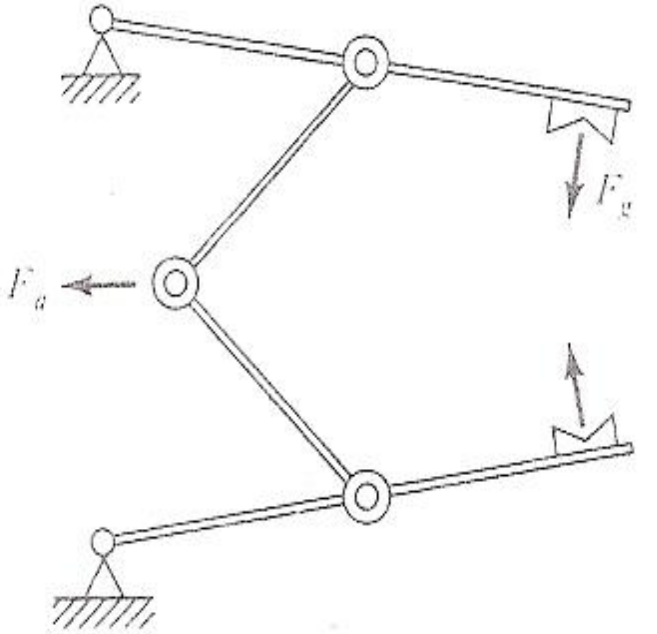

Figure 5-6 Some possible linkages for rocker support.

© J.Jeevamalar, EGSPEC

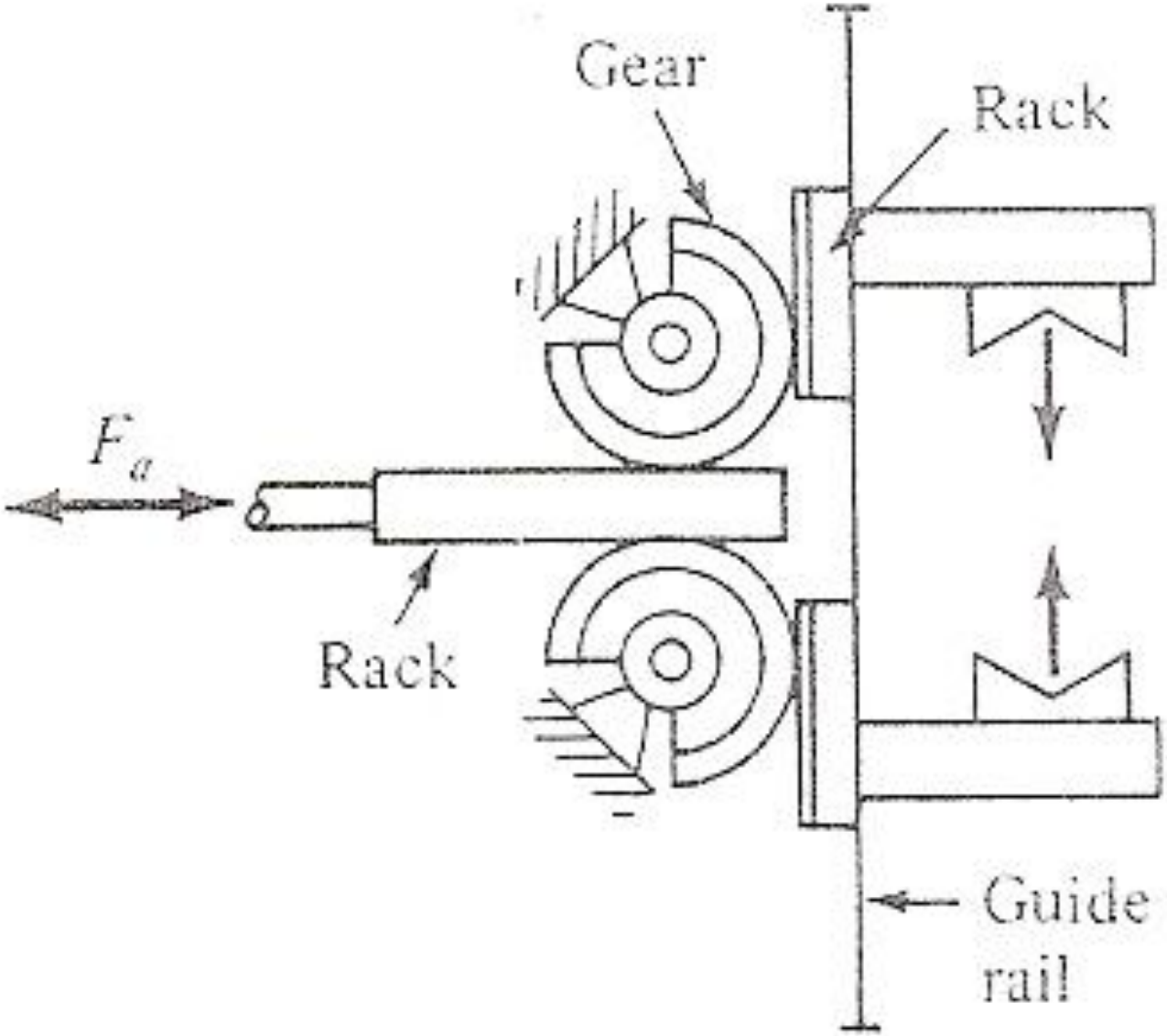

Figure 5-7 Gear-and-rack method of actuating the gripper.

@ J.Jeevamalar, EGSPEC

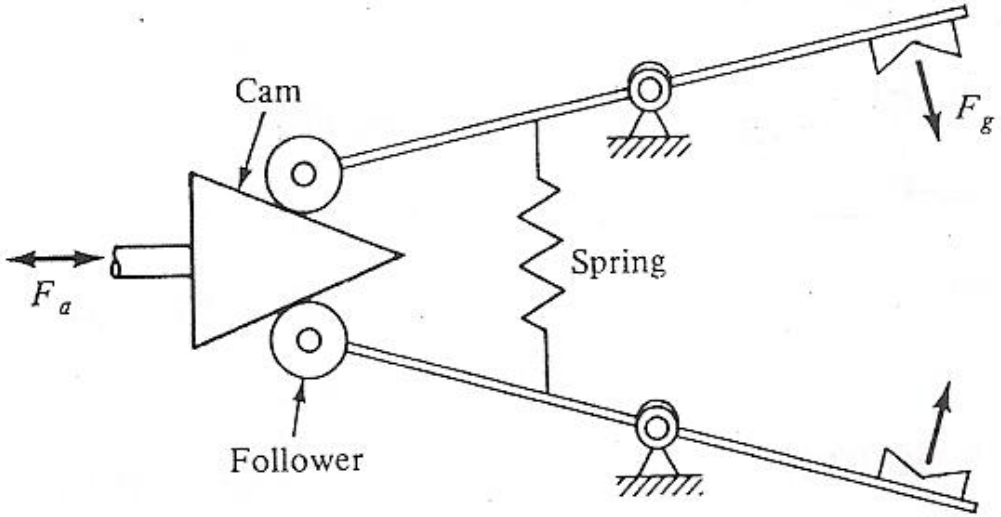

Figure 5-8 Cam-actuated gripper.

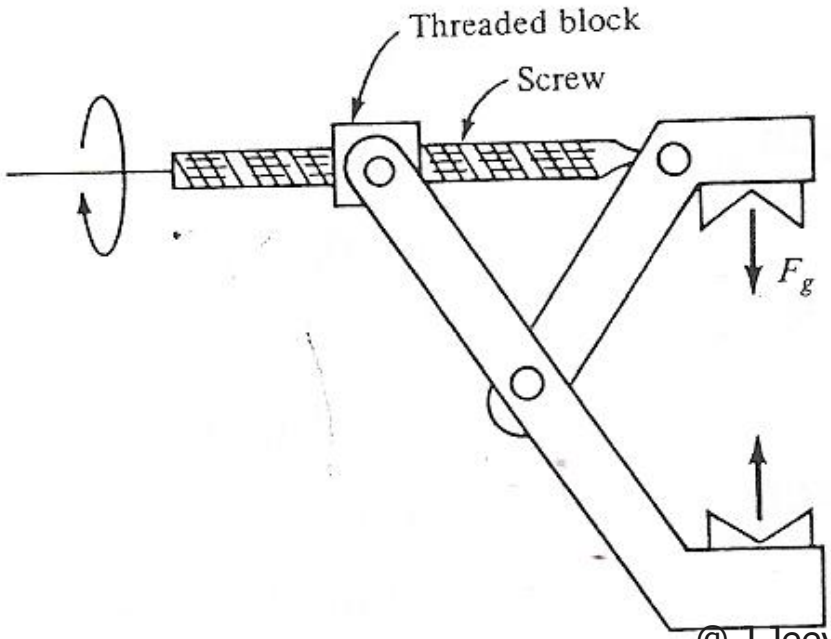

Figure 5-9 Screw-type gripper actuation.

@ J.Jeevamalar, EGSPEC

Main Types of Mechanical Grippers

Parallel

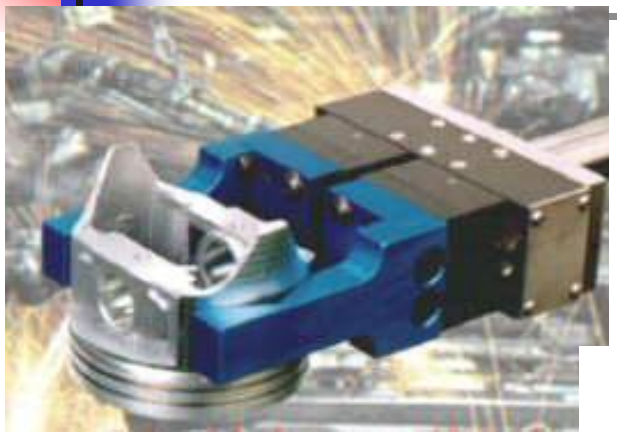

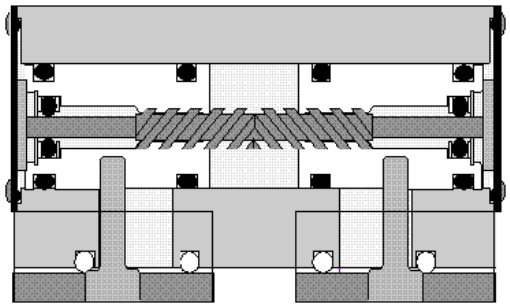

Angular

2 or more "fingers"

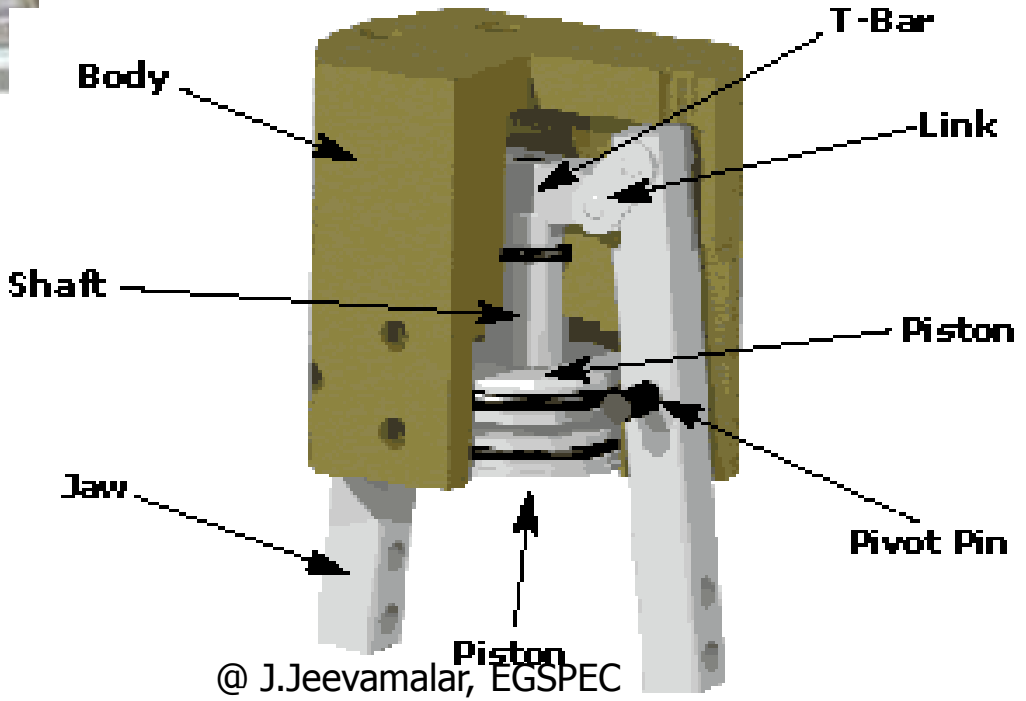

Mechanical Grippers: Applications

Holding a cast wheel while it is being cleaned with live steam.

In a clean room

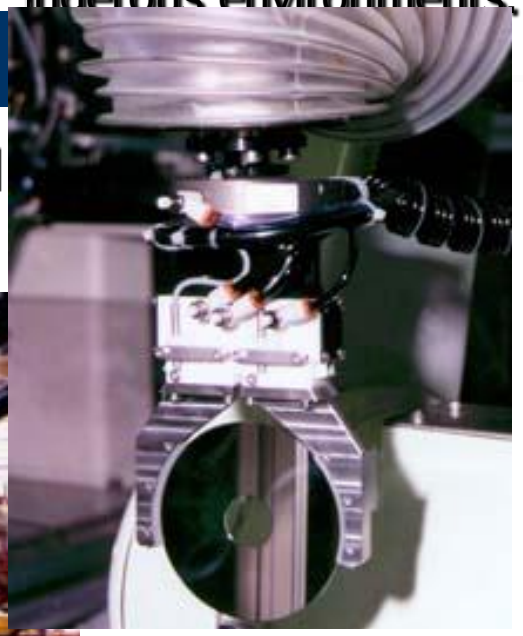

Mechanical Grippers: Limitations

- Watch out for dynamic forces and moments when sizing a gripper.

- Gripper could drop part with loss in air pressure (can order spring clamps to solve this problem)

- Angular grippers are less expensive, but the arcing motion of the jaws may require additional tooling clearance and will grip at varying points as part width varies. A parallel gripper is simpler to tool to compensate for part size variance.

Mechanical Gripper Specifications

Grip force: ranges tiny forces .1 lbs to over 1600 lbs (don't forget dynamic forces, moments)

Part sizes: typically .01 to 36 inches

Number of jaws: typically 2 to 4 jaws or fingers

Repeatability: typically +/- .001 to .005 inches

Cost: $100 to $1,000

Cycles to failure: up to 10 million cycles

Supporting technologies: air valves, air compressors, sensors, I/O interfaces

Companies: Thomas Register lists 100+ vendors. Here are the largest:

PHD, inc.	Fairlane
Robohand	Robotic Accessories
Zaytran	Magnum

Gripper Style

- Angular: The gripper jaws are opened and closed around a central pivot point, moving in a sweeping or arcing motion. Angular grippers are often used when limited space is available or when the jaws need to move up and out of the way.
- Parallel: The gripper jaws move in a parallel motion in relation to the gripper body. Used in a majority of applications, parallel grippers are typically more accurate than other style grippers.

Gripper Style

angular

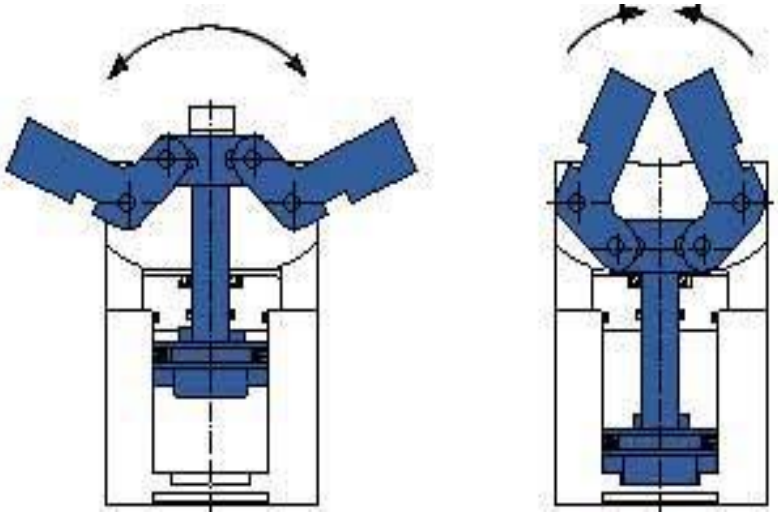

Parallel

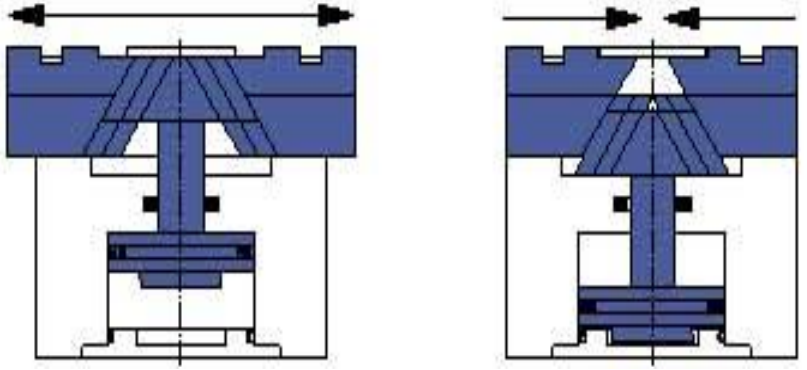

Gripper Actuation

- Manual: Actuated by hand crank, wheel, levers, or other manual or mechanical means.
- Electric: Grippers fingers or jaws actuated by electric motor, solenoid, etc.
- Pneumatic: Gripper is actuated by compressed air acting on a cylinder or vanes.
- Hydraulic: Gripper is actuated by hydraulic fluid acting on a cylinder or vanes.

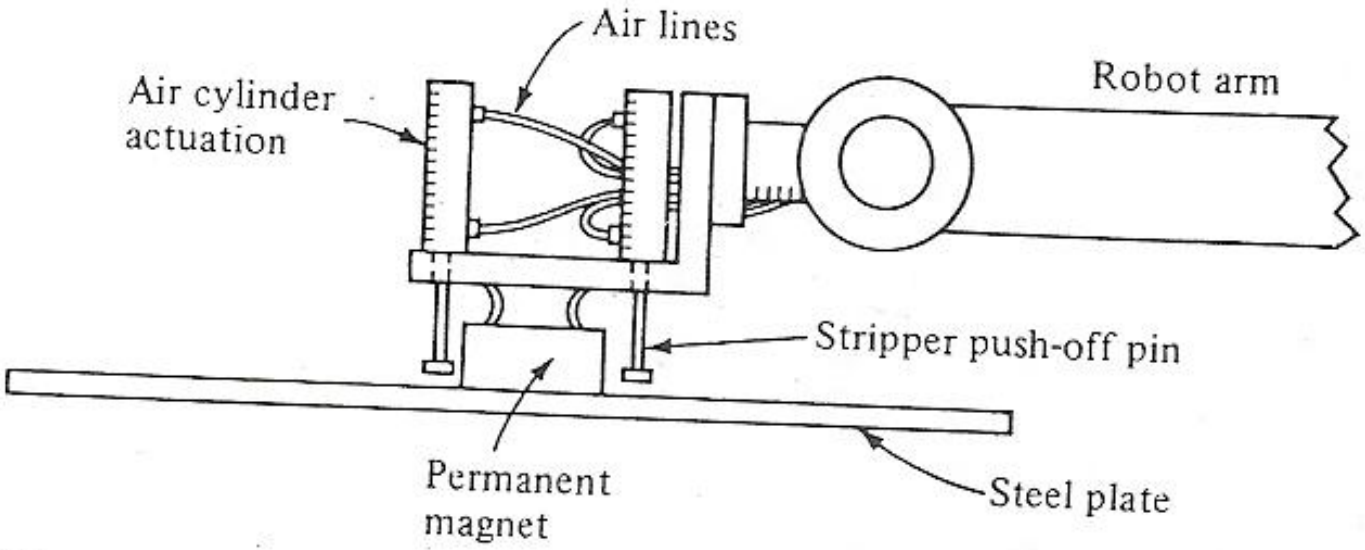

Figure 5-15 Stripper device operated by air cylinders used with a permanent magnet gripper

Electric Gripper

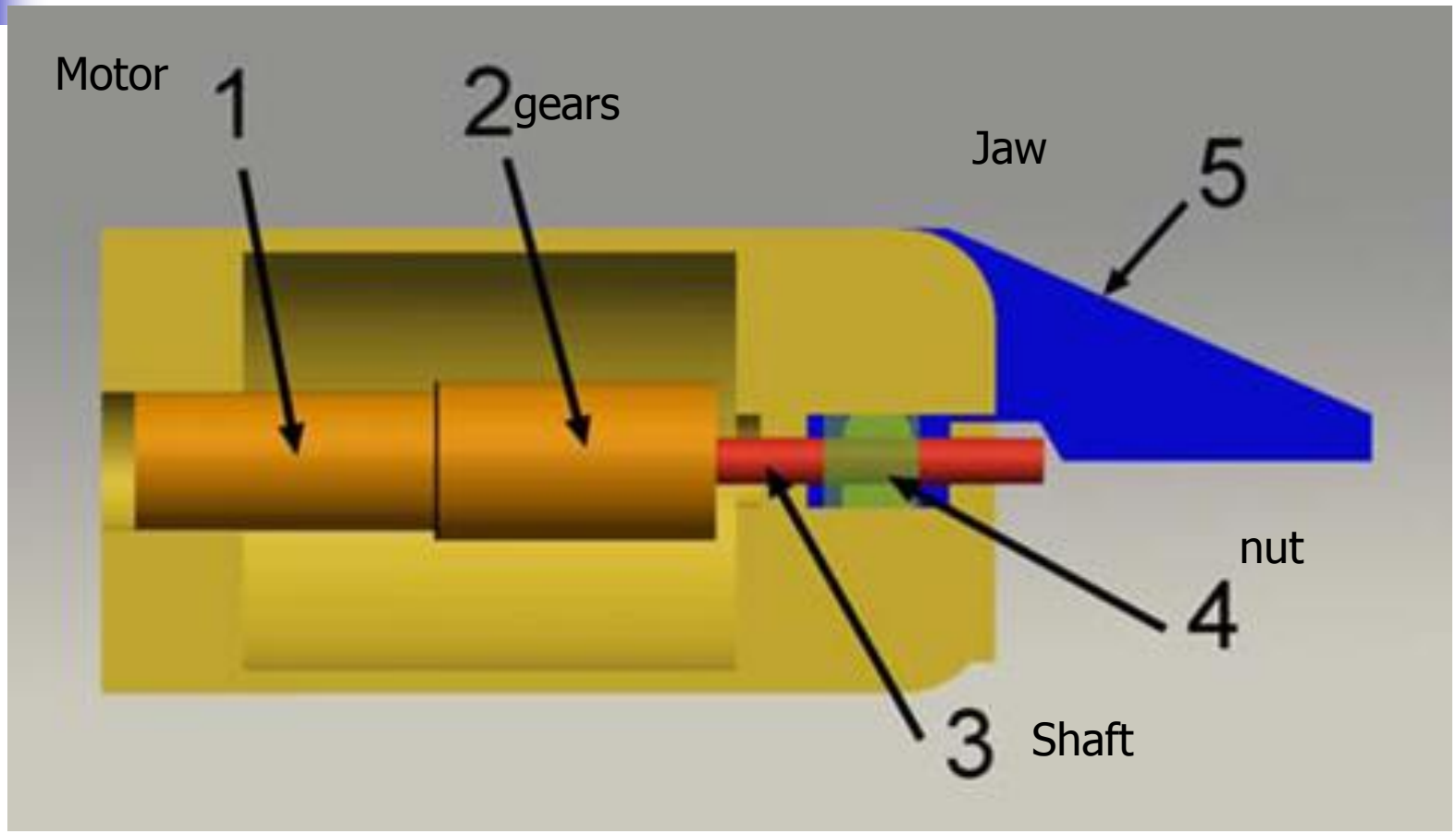

Pneumatic Gripper

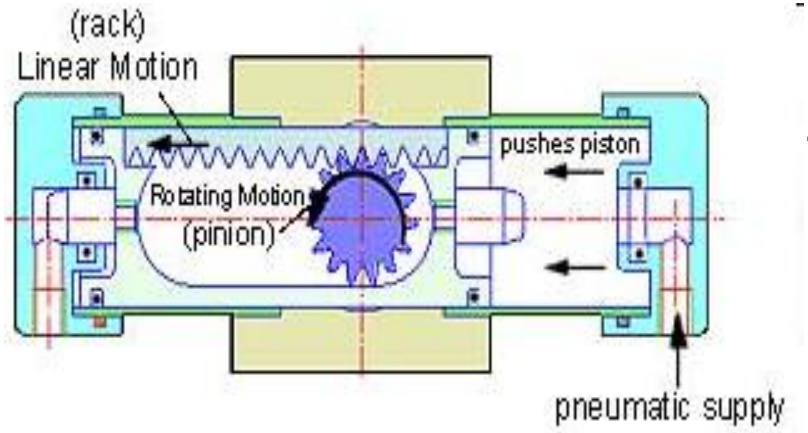

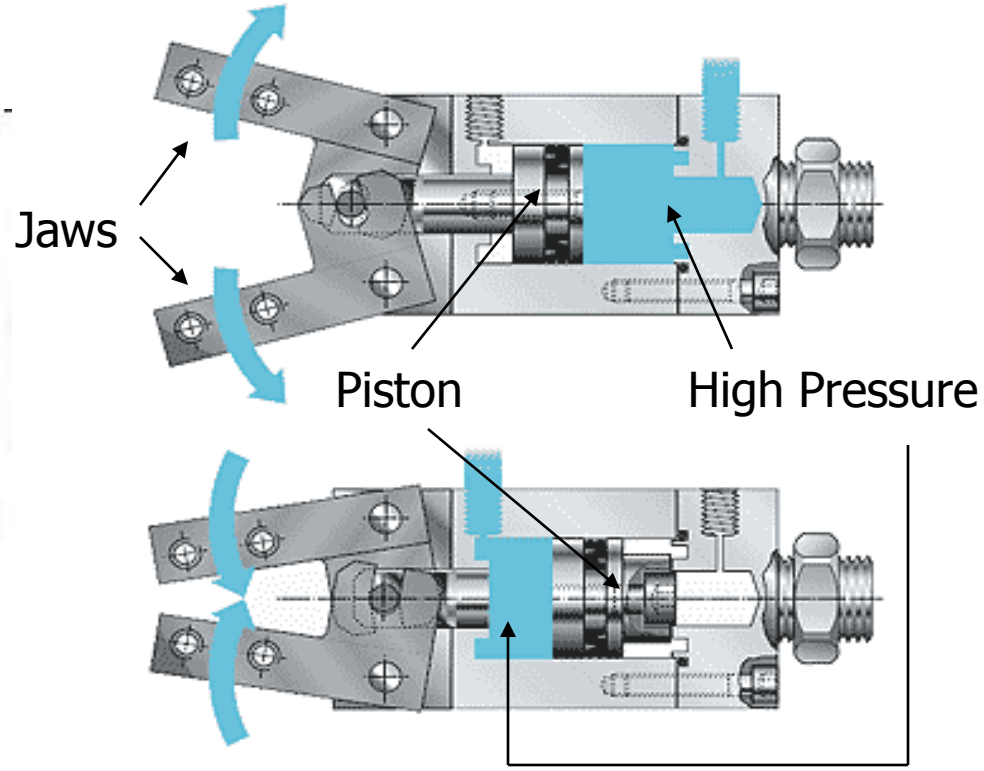

Hydraulic Gripper

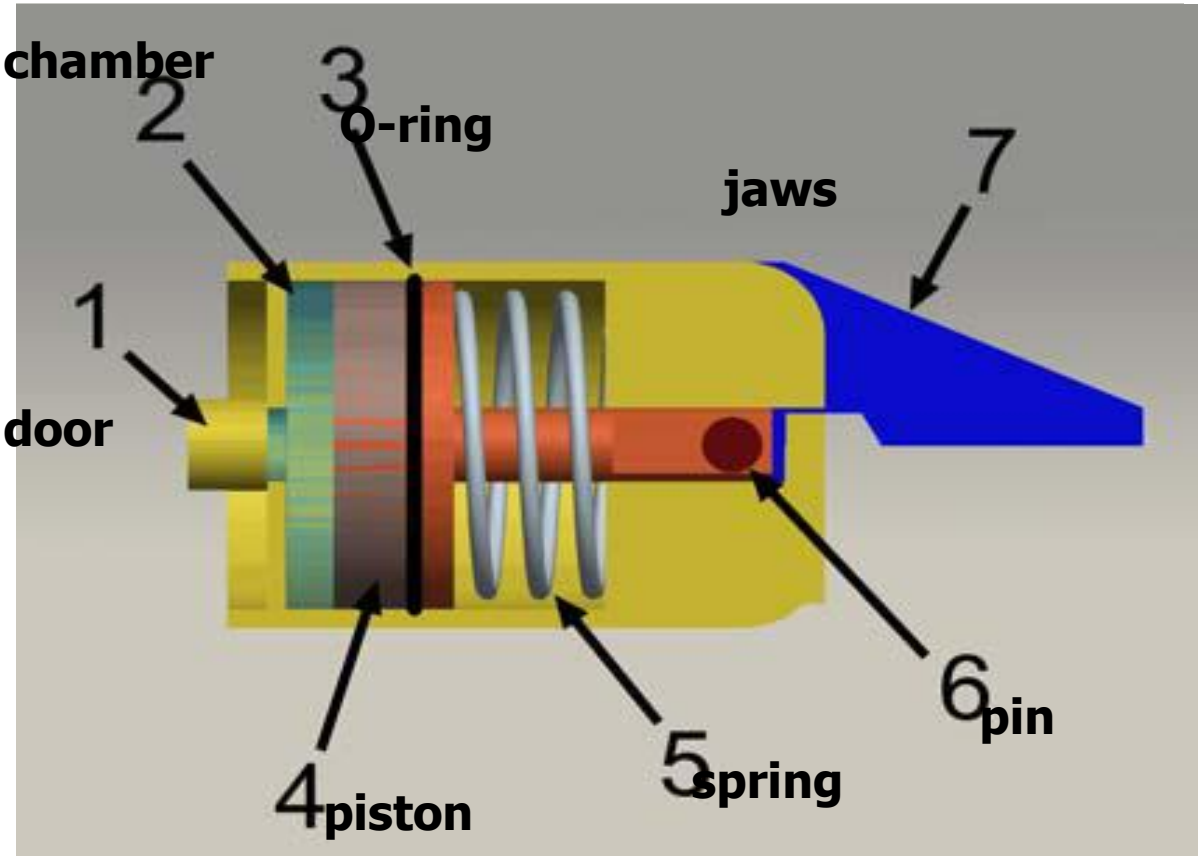

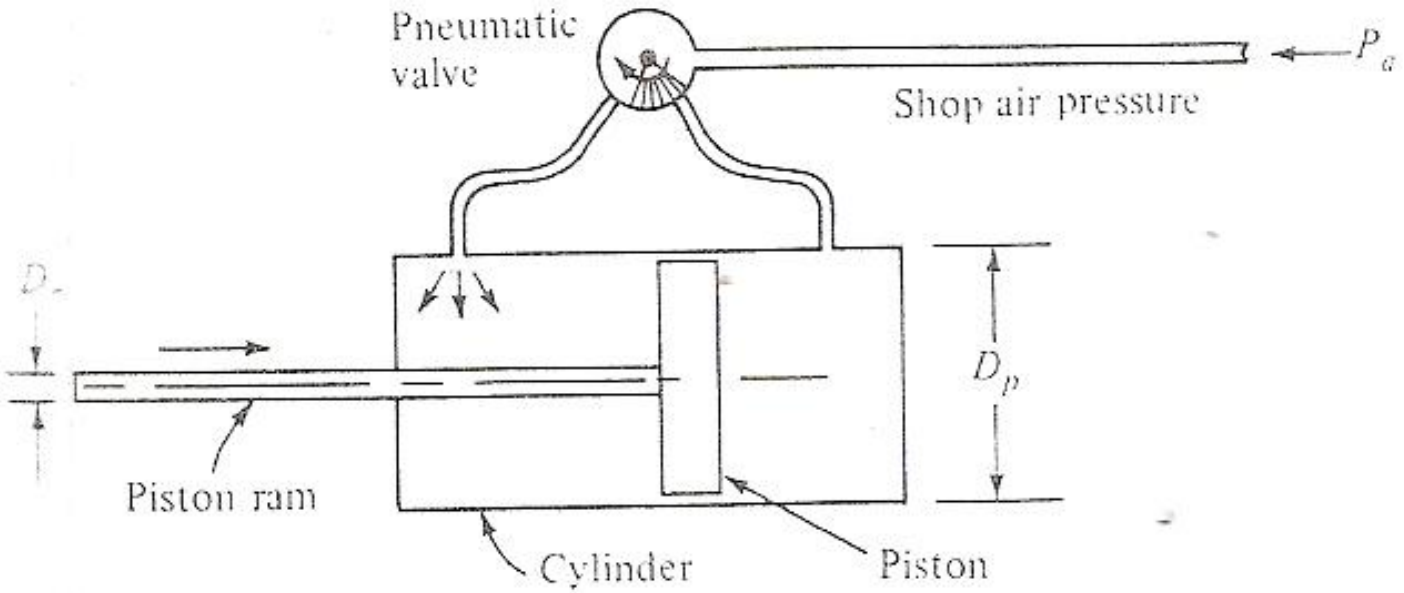

Figure 5-18 Schematic diagram of a piston.

These piston forces can be calculated as follows:

$$F_{\text{exten}} = P_a \frac{D_p^2}{4} \tag{5-4}$$

$$F_{\text{retract}} = \frac{P_a}{4}(D_p^2 - D_r^2) \tag{5-5}$$

where F_{exten} = the piston force on the extension stroke, lb
F_{retract} = the piston force on the retraction stroke, lb
D_p = the piston diameter, in.
D_r = the ram diameter, in.
P_a = air pressure, lb/in.

@2J.Jeevamalar, EGSPEC

Advantages and Disadvantages

Pneumatic	Electric Motor	Hydraulic
Smaller units, quick assembly	High accuracy and repeatability	High strength and high speed
High cycle rate	Less floor space	Large robots, Takes floor space
– Easy maintenance	Low cost	Mechanical Simplicity
	Easy maintenance	Used usually for heavy payloads

Vacuum Grippers

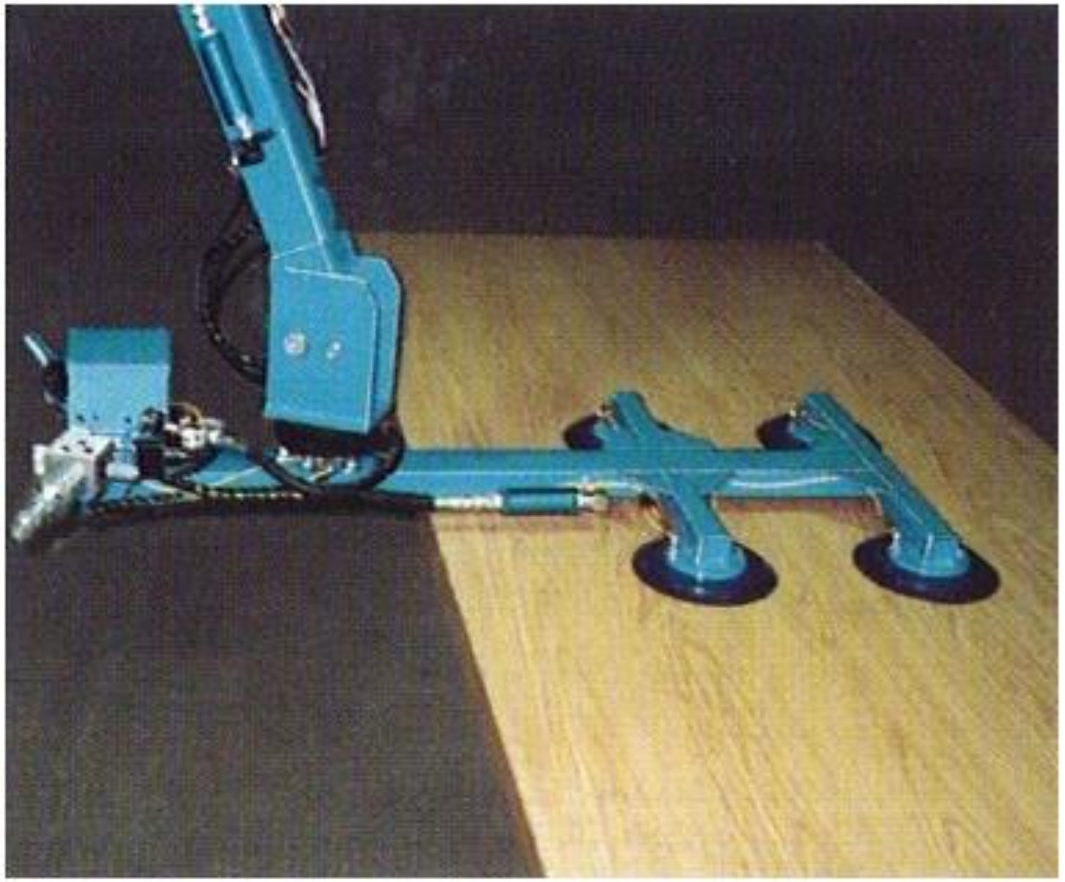

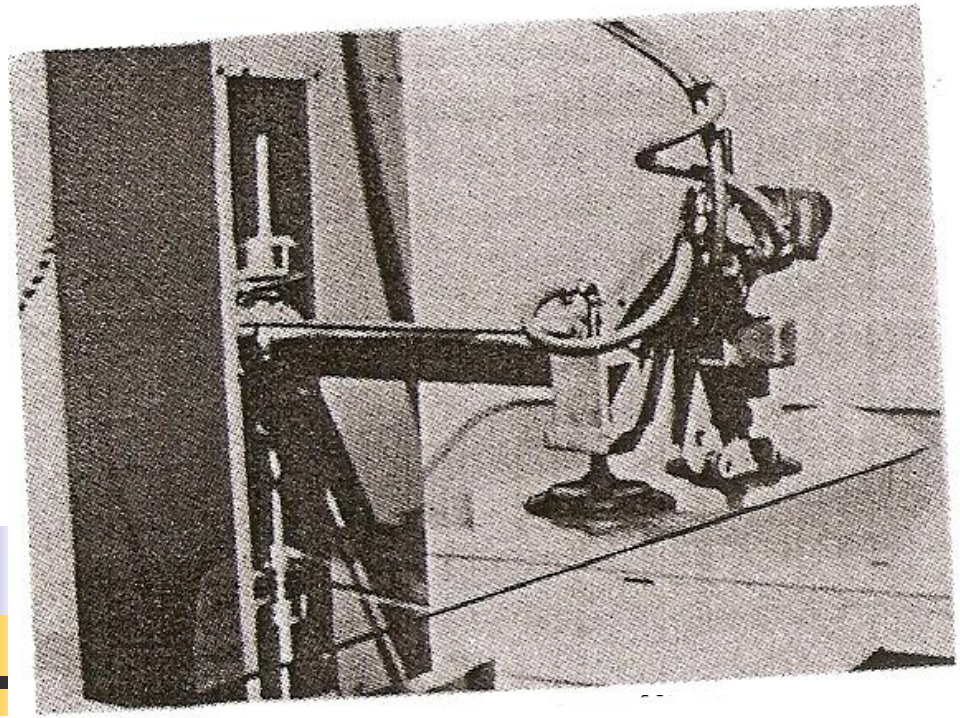

Figure 5-13 Vacuum cup gripper lifting glass plates (Photo courtesy of Prab Conveyors, Inc.)

$$F = PA$$

where F = the force or lift capacity, lb
P = the negative pressure, lb/in.^{2}
A = the total effective area of the suction cup(s) used to create the vacuum, in.^{2}

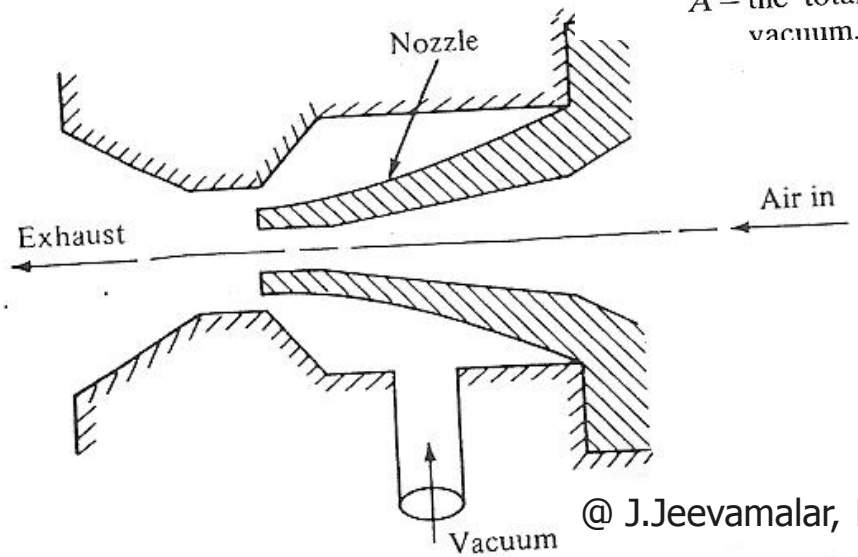

Figure 5-14 Venturi device used to operate a suction cup.

@ J.Jeevamalar, EGSPEC

Vacuum Grippers (aka suction cups)

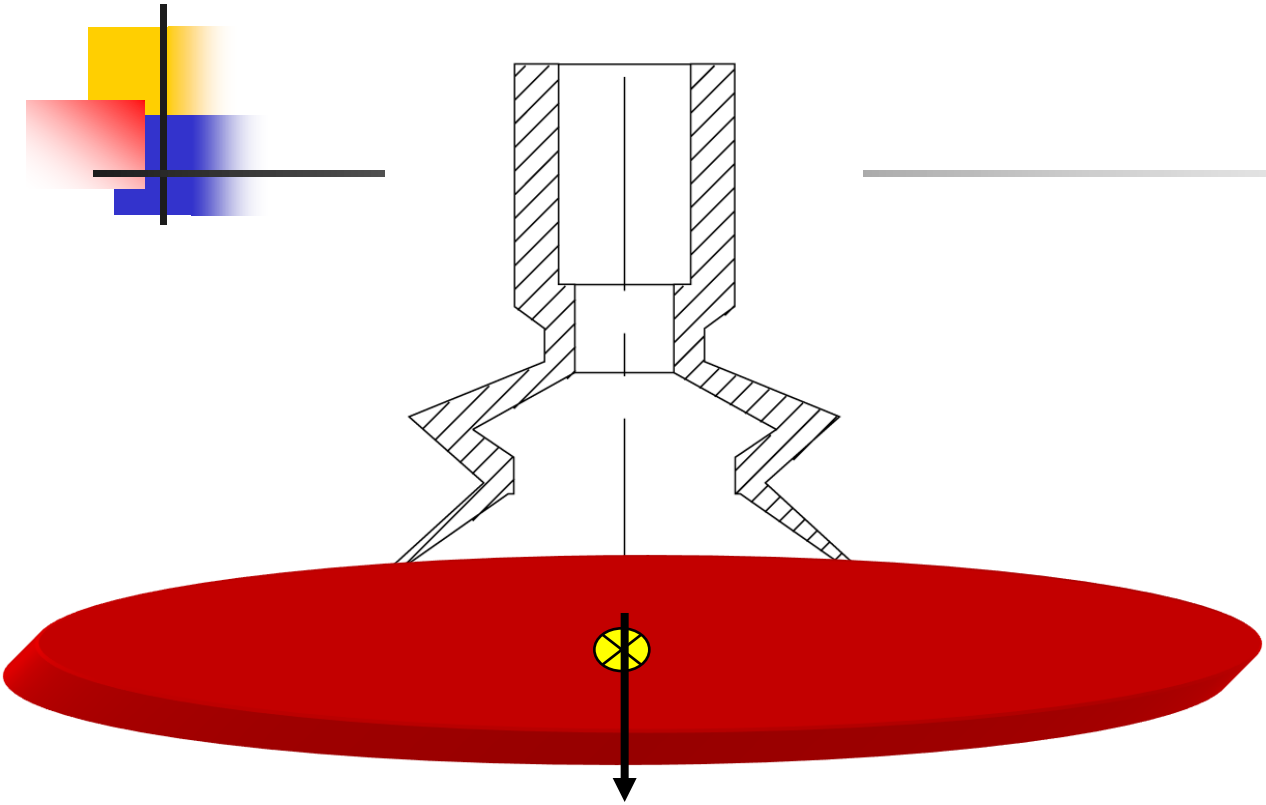

Types of Vacuum Grippers

One vendor, Piab Inc., claims "A suitable suction cup is available for virtually any situation – with very few exceptions. Suction cups are very well suited for a wide variety of needs and circumstances. They can handle plate, eggs, paper, wood – practically any material. Be it smooth, irregular, bent, porous, airtight, lightweight, heavy, angled, hot or erial can be handled by suction ently and quickly."

Uneven objects

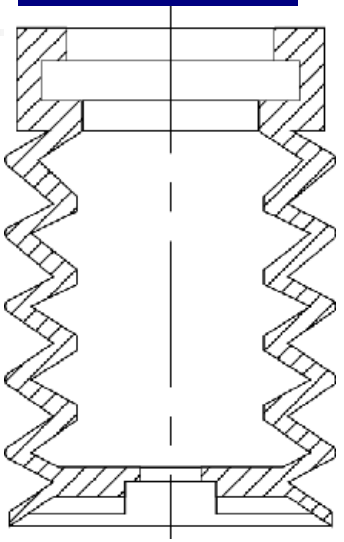

Small to medium objects

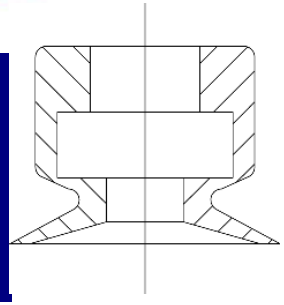

Large, heavy objects

Types of Vacuum Grippers

Level compensator

A level compensator compensates for differences in level and absorbs shocks. The mounting also reduce the need for accurate positioning in height.

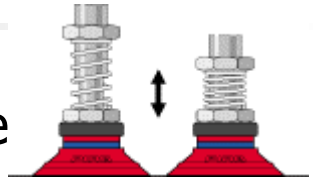

Ball joint

A ball joint adjusts itself automatically to different contact angles and reduces the bending moments on the suction cup. The ball-joint is recommended in the following typical cases:

- for lifting heavy objects or plates
- for handling workpieces that are in motion
- for handling workpieces that are curved or have irregular surfaces

Vacuum Grippers Application

PACKAGING:

Canning
Tray Making
Bottling
Box Making
Capping
Labeling
Bagging & Sealing

MATERIAL HANDLING:

Auto Manufacturing
Steel Fabricators
Conveyors
Manufacture & Packaging of Compact Dics
Electronics
Heavy Industry

Vacuum Gripper Specifications

Gripping force: generally up to 300 lbs. Multiple cups can pick up to 6,000

Pressures: requires –3 to –15 psi gage

Sizes: suction cups typically range between .05 and 18 inch diameters

Cost: Suction cup assembly $10-$500 Supporting technology: $500 – $2,000

Supporting Technologies: Compressors, lines, valves, air filters, controllers

Companies: Thomas Register lists 100+ vendors. Here are the biggest:

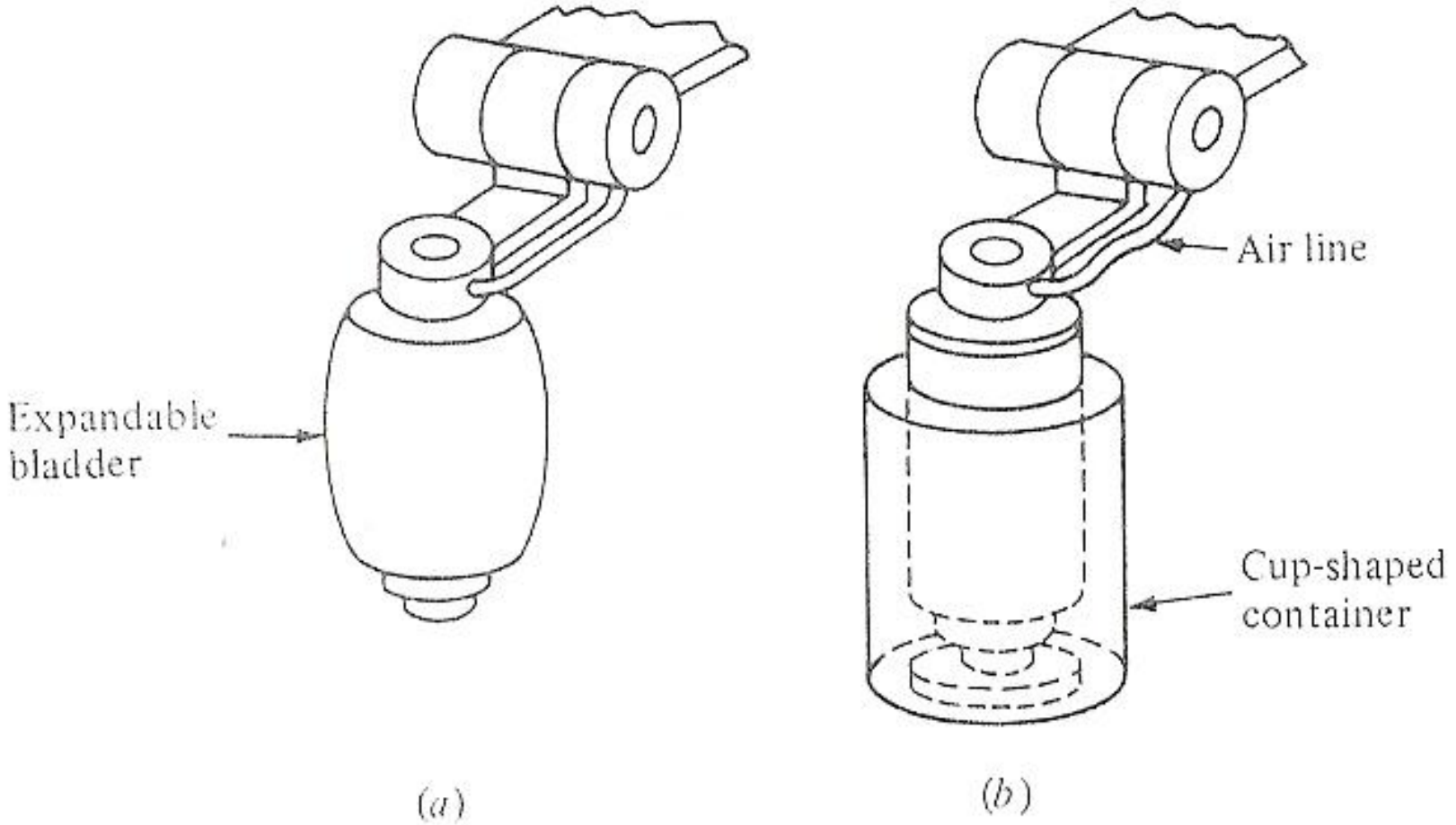

Figure 5-16 Expansion bladder used to grasp inside of a cup-shaped container.

@ J.Jeevamalar, EGSPEC

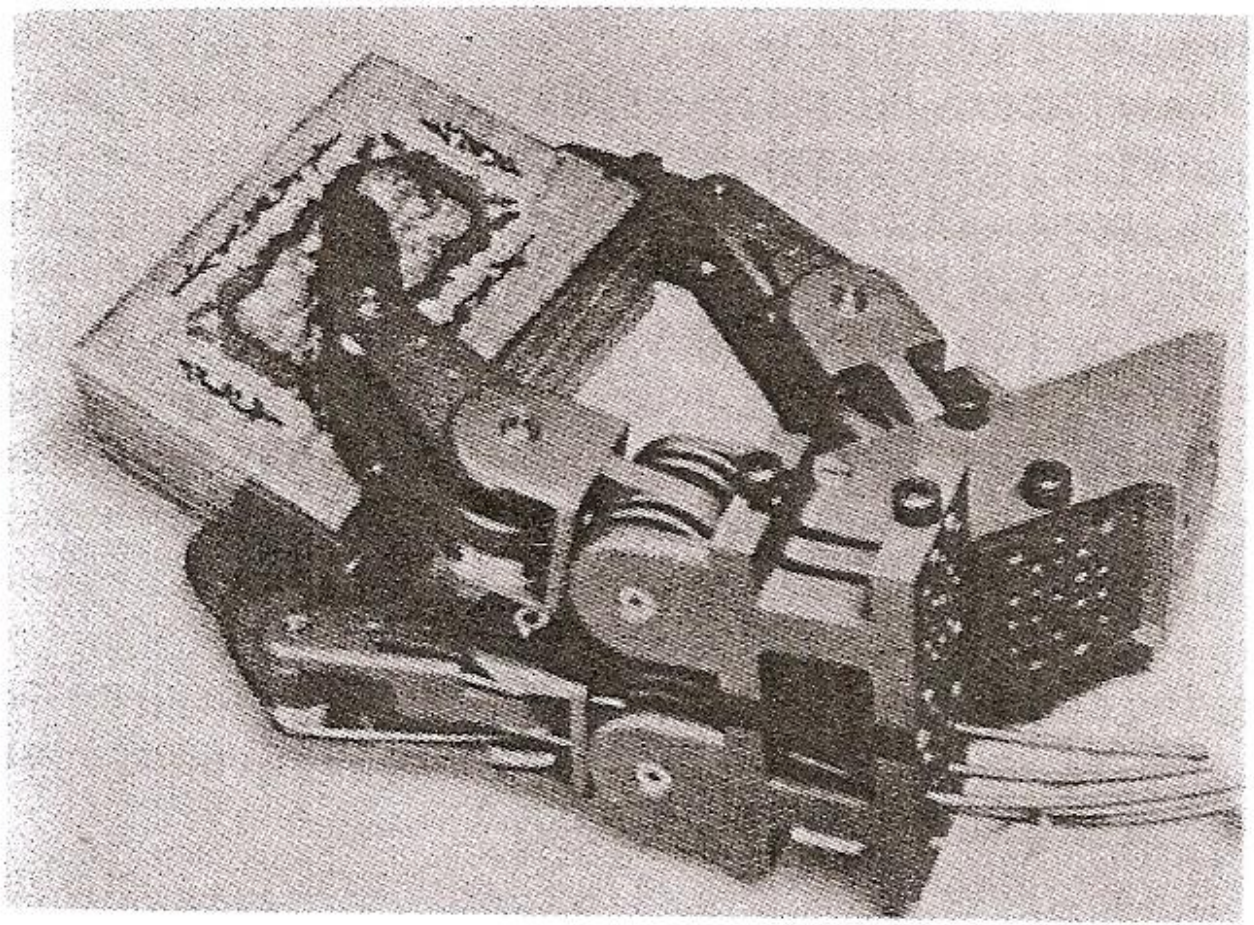

Figure 5-17 The Stanford/JPL three-fingered anthropomorphic hand. (Photo courtesy of Salisbury Robotics, Inc.)

@ J.Jeevamalar, EGSPEC

TOOLS AS END EFFECTORS

- Spot-welding tools
- Arc-welding torch
- Spray-painting nozzle
- Rotating spindles for operations such as:
  - drilling
  - routing
  - wire brushing
  - grinding
- Liquid cement applicators for assembly
- Heating torches
- Water jet cutting tool

@ J.Jeevamalar, EGSPEC

5-5 THE ROBOT/END EFFECTOR INTERFACE

An important aspect of the end effector applications engineering involves the interfacing of the end effector with the robot. This interface must accomplish at least some of the following functions:

Physical support of the end effector during the work cycle must be provided.
Power to actuate the end effector must be supplied through the interface.
Control signals to actuate the end effector must be provided. This is often accomplished by controlling the actuating power.
Feedback signals must sometimes be transmitted back through the interface to the robot controller.

In addition, certain other general-design objectives should be met. These include high reliability of the interface, protection against the environment, and overload protection in case of disturbances and unexpected events during the work cycle.

@ J.Jeevamalar, EGSPEC

5-6 CONSIDERATIONS IN GRIPPER SELECTION AND DESIGN

Certainly one of the considerations deals with determining the grasping requirements for the gripper. Engelberger [3] defines many of the factors that should be considered in assessing gripping requirements. The following list is based on Engelberger's discussion of these factors:

1. The part surface to be grasped must be reachable. For example, it must not be enclosed within a chuck or other holding fixture.
2. The size variation of the part must be accounted for, and how this might influence the accuracy of locating the part. For example, there might be a problem in placing a rough casting or forging into a chuck for machining operations.

@ J.Jeevamalar, EGSPEC

3. The gripper design must accommodate the change in size that occurs between part loading and unloading. For example, the part size is reduced in machining and forging operations.
4. Consideration must be given to the potential problem of scratching and distorting the part during gripping, if the part is fragile or has delicate surfaces.
5. If there is a choice between two different dimensions on a part, the larger dimension should be selected for grasping. Holding the part by its larger surface will provide better control and stability of the part in positioning.
6. Gripper fingers can be designed to conform to the part shape by using resilient pads or self-aligning fingers. The reason for using self-aligning fingers is to ensure that each finger makes contact with the part in more than one place. This provides better part control and physical stability. Use of replaceable fingers will allow for wear and also for interchangeability for different part models.

@ J.Jeevamalar, EGSPEC

A related issue is the problem of determining the magnitude of the grasping force that can be applied to the object by the gripper. The important factors that determine the required grasping force are:

The weight of the object.
Consideration of whether the part can be grasped consistently about its center of mass. If not, an analysis of the possible moments from off-center grasping should be considered.
The speed and acceleration with which the robot arm moves (acceleration and deceleration forces), and the orientational relationship between the direction of movement and the position of the fingers on the object (whether the movement is parallel or perpendicular to the finger surface contacting the part).
Whether physical constriction or friction is used to hold the part.
Coefficient of friction between the object and the gripper fingers.

@ J.Jeevamalar, EGSPEC

Table 5-1 Checklist of factors in the selection and design of grippers

Factor	Consideration
Part to be handled	Weight and size Shape Changes in shape during processing Tolerances on the part size Surface condition, protection of delicate surfaces
Actuation method	Mechanical grasping Vacuum cup Magnet Other methods (adhesives, scoops, etc.)
Power and signal transmission	Pneumatic Electrical Hydraulic Mechanical
Gripper force (mechanical gripper)	Weight of the object Method of holding (physical constriction or friction) Coefficient of friction between fingers and object Speed and acceleration during motion cycle
Positioning problems	Length of fingers Inherent accuracy and repeatability of robot Tolerances on the part size

@ J.Jeevamalar, EGSPEC

Service conditions	Number of actuations during lifetime of gripper Replaceability of wear components (fingers) Maintenance and serviceability
Operating environment	Heat and temperature Humidity, moisture, dirt, chemicals
Temperature protection	Heat shields Long fingers Forced cooling (compressed air, water cooling, etc.) Use of heat-resistant materials
Fabrication materials	Strength, rigidity, durability Fatigue strength Cost and ease of fabrication Friction properties for finger surfaces Compatibility with operating environment
Other considerations	Use of interchangeable fingers Design standards Mounting connections and interfacing with robot Risk of product design changes and their effect on the gripper design Lead time for design and fabrication Spare parts, maintenance, and service Tryout of the gripper in production

@ J.Jeevamalar, EGSPEC

Application of Grippers

- Machine loading/unloading
- Assembly lines
- Material transfer
- Manufacturing processes

Machine loading/unloading

@ J.Jeevamalar, EGSPEC

Assembly lines

Material transfer

Application of Grippers

- Specific examples
  - Workers in nuclear science use grippers to move things remotely when the things dealt with are dangerous for body health.
  - Astronauts can manipulate remote-controlled grippers in space from within the safety of the spacecraft when they are building the space station.

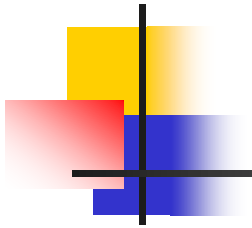

THANK U VERY MUCH

THANK U VERY MUCH